Small Mushroom Head Wifi Antenna

AN_W003



Mechanical Dimension

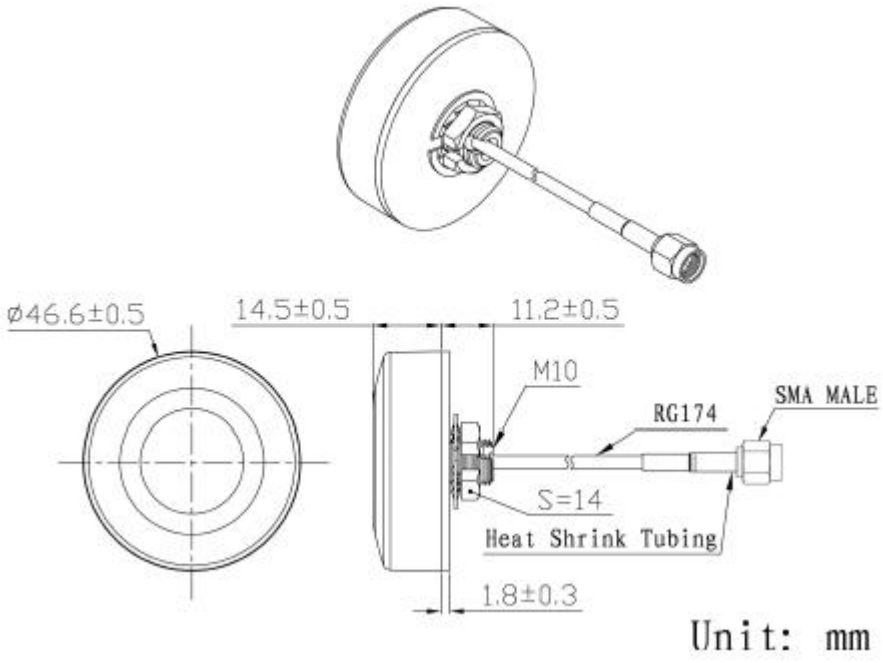

Suzhou maswell communication technology co. Ltd
Add:Floor 3, Building 6, No. 88 Zhenbei Road, High-tech District, Suzhou 215153, Jiangsu, China
Http ://www.maswelltech.com E-mail:Sales@maswelltech.com

Small Mushroom Head Wifi Antenna

AN_W003

Specifications

Item		Specifications
WiFi Antenna	Frequency Range	2400～2483.5/4800~5825MHz
	Polarization	Linear
	Gain	2dBi（Zenith）
	V.S.W.R (min)	＜2.5
	Impendance	50Ω
Mechanical	Cable	RG174
	Connector	SMA / MCX / FAKRA or others
	Radome Material	ABS
	Mounting Method	Screw
Environmental	Operating Temperature	-40℃~+85℃
	Relative Humidity	Up to 95%
	Ingress Protection	IP65～IP66(exclude cable outlet)
	Vibration	10 to 55Hz with 1.5mm amplitude 2hours
	Environmentally Friendly	ROHS Compliant

Suzhou maswell communication technology co. Ltd
Add:Floor 3, Building 6, No. 88 Zhenbei Road, High-tech District, Suzhou 215153, Jiangsu, China
Http ://www.maswelltech.com E-mail:Sales@maswelltech.com

Small Mushroom Head Wifi Antenna

AN_W003

Radiation Patterns

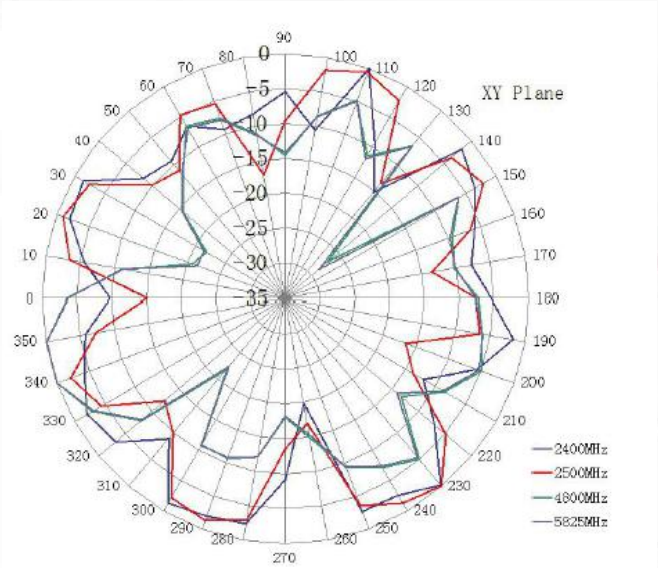

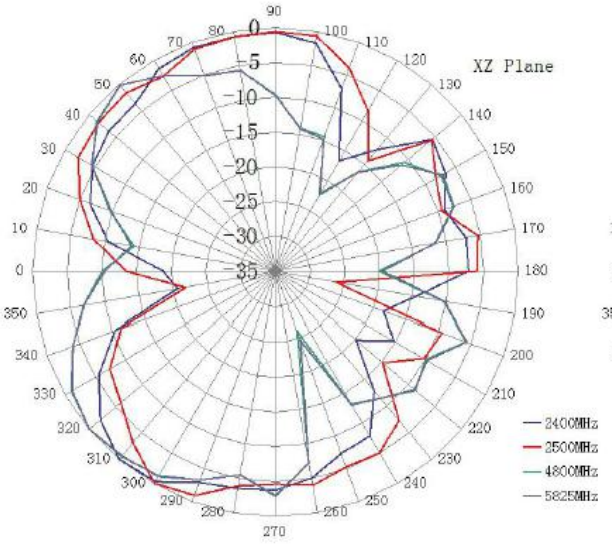

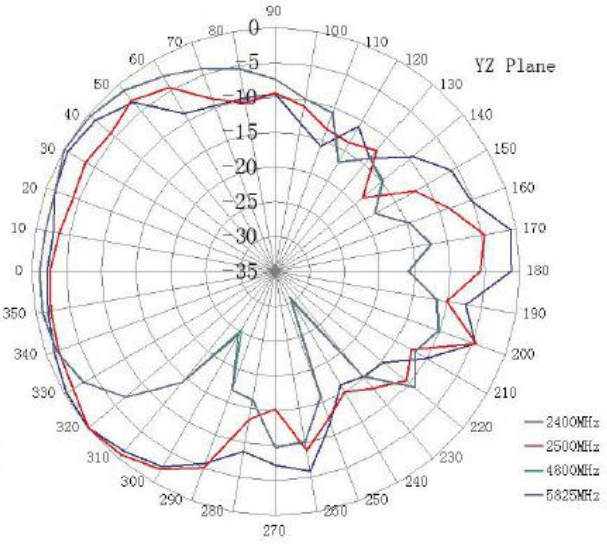

Suzhou maswell communication technology co. Ltd
Add:Floor 3, Building 6, No. 88 Zhenbei Road, High-tech District, Suzhou 215153, Jiangsu, China
Http ://www.maswelltech.com E-mail:Sales@maswelltech.com